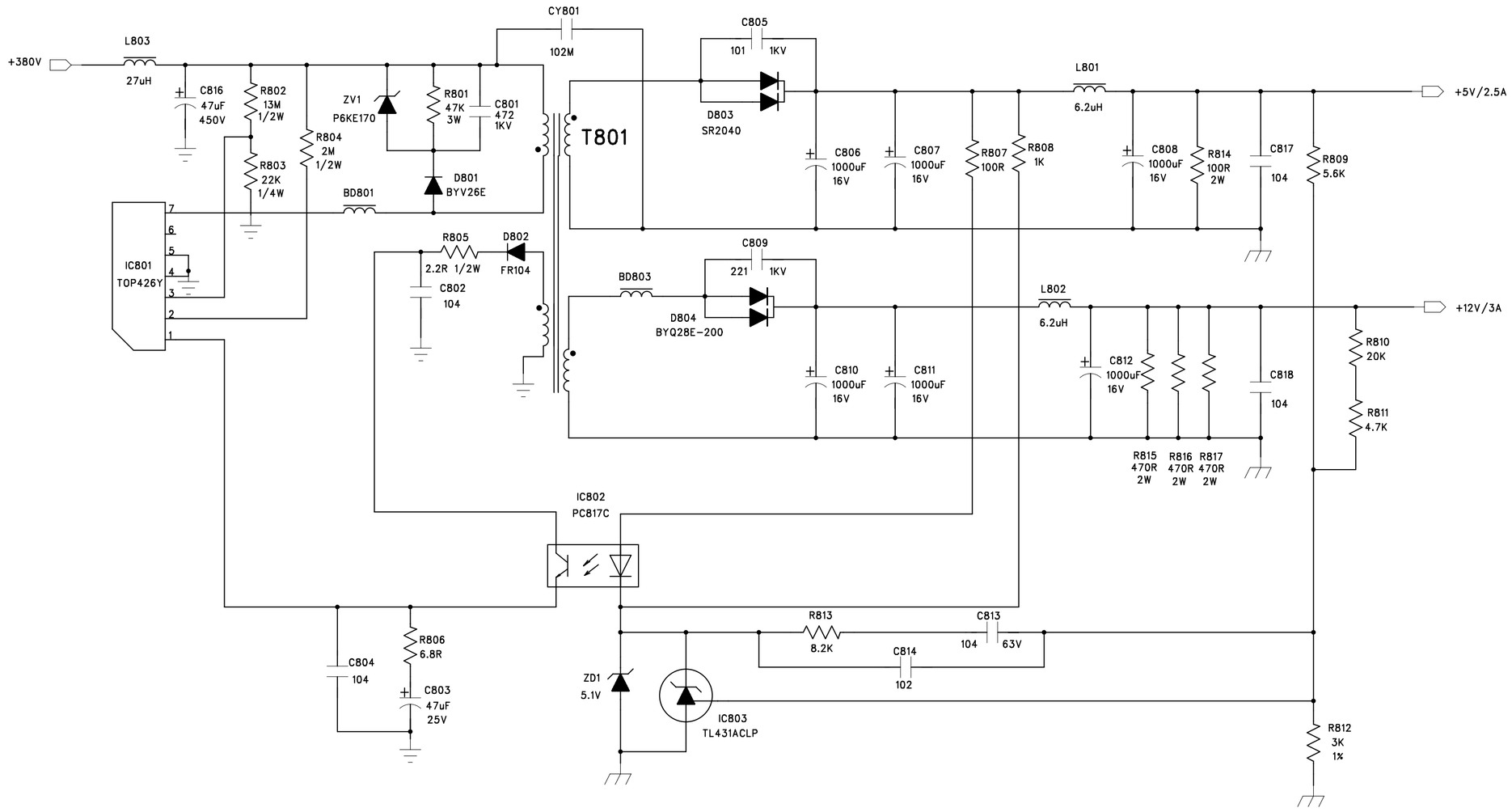

1,ALL RESISTORS ARE IN OHms 1/8W 5%

2,ALL CAPACITORS VALUE ARE IN MICROFARADS 50V 0603

TCL MULTIMEDIA ELECTRONICS R&D CENTER		TITLE:PDP421 PowerSupply(main3)	
UNIT:mm	SCALE	REV.:1.0	SHEET 1 OF 1
PREPARED	CHECKED	APPROVED	FILE NO.
LuHongBo			